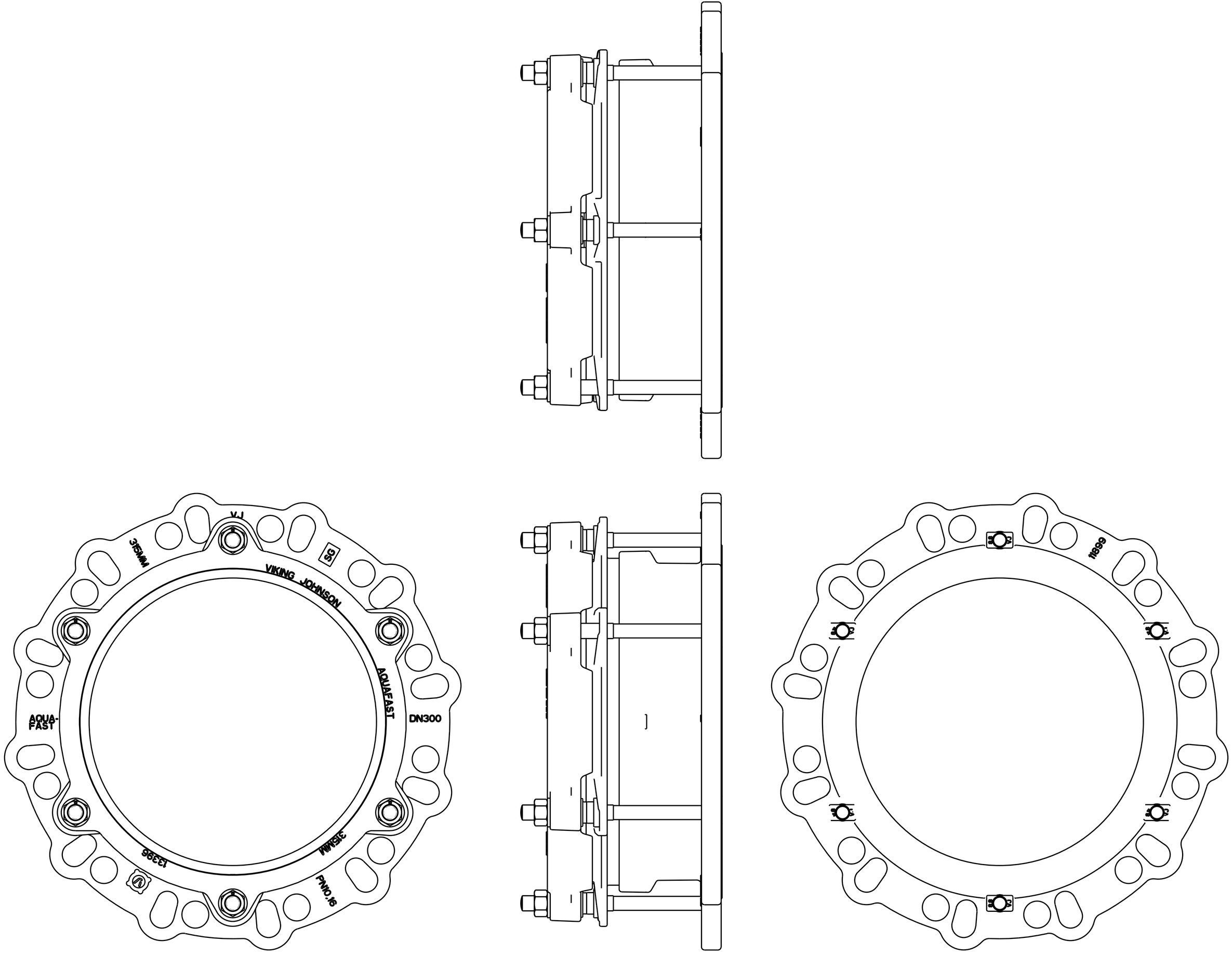
VJ
SG
VIKING JOHNSON
AQUAFAST
DN300
AQUA-
FAST
PN10/16
1339
1699